Road Research Report:

TRIUMPH TR-4A

It's smoother and faster sailing with Triumph's new independent rear suspension

In all things, it is evolution rather than revolution that produces satisfactory results, and we might say that this is particularly true in the automotive field. Consider the example set by Standard-Triumph Motor Company with their TR-series sports cars: some 12 years ago they went into production with a sports roadster, the TR-2 (developed from the prototype TR-1), which was in every regard evolved from contemporary, conservative engineering practice. Indeed, most of the mechanical elements had been borrowed from other machinery in the Standard-Triumph line.

As old-timers in the sport will recall, that first Triumph sports car to be sold in quantity here in America was something less than perfect. Not all of the bits that went into its making worked in perfect harmony, and it was decidedly rough and noisy. There was little pretension of refinement in any of its appointments,

CONTINUED

and we particularly remember, when the rains would come, how much we wished for an extra set of wipers on the inside of the windshield. The car's top never seemed to feel obliged to hinder the progress of any passing breeze, and it fought what was at best a delaying action with water.

Even so, many of us bought those early Triumphs. They were inexpensive, and rather fast; moreover, they quickly established a reputation for exceptional reliability—a quality not attributable to all sports cars, then *or* now. There were small problems; none of man's contrivances has ever been entirely free of them. Still, in the main, the TR-2 could be depended upon to deliver its owner to his destination, be it near or far, on a day-in, day-out basis, and that holds true right up to the present.

With the passing of years, refinements came. The overall finish was improved immensely; the top actually became waterproof; even the ride was somewhat better. In 1956, the process of evolution brought us 10 more horsepower, side-curtains (remember those things) with sliding "plexiglass" panels, and bigger brakes and the designation, TR-3. Then came disc brakes (Triumph was the first low-priced sports car to have them) with the TR-3A. Progress was on the march.

The first big change came with the TR-4, which had new bodywork with a lot of civilized features like roll-up windows, and a dash more (143cc) displacement. Still, underneath, it was the same car—with all the detail improvements made over the years, of course. Generally speaking, it was very well received, but by this time a lot of smart-alecks had discovered that a sports car need not ride like an ox-cart to handle properly, so much was said about the rear axle's intrusive behavior. Quite probably, not much would have been made of it all had not Triumph been making economy sedans with all-independent suspension. In any case, the situation was remarked upon by practically everyone, and there were predictions that the Triumph sports car would be given the sedans' independent rear suspension in due course.

Today, "due course" is upon us, as Standard-Triumph has introduced the TR-4A, which, in the evolutionary process, has become much improved. And, among the improvements, is an independent rear suspension. Curiously, this feature is listed as an optional extra, like overdrive or wire wheels; although, unlike the others, it most certainly cannot be added after the car leaves the factory. Apart from the obvious differences in hardware around the rear wheels and final drive, there is the fact that the entire frame is changed, which must surely make the TR-4A's "IRS" one of the wildest "optional extras" ever offered by any manufacturer.

The TR-4A's independent rear suspension has been borrowed almost in its entirety from the Triumph 2000 sedan. The company could have saved a lot of money by cobbling together something like the swing-axle system of the Herald sedan, but they have very wisely resisted the temptation. A swing-axle layout is a marvel of low cost and simplicity, but it gives huge and inconvenient camber changes. With swing axles, the suspension geometry is such that the wheels will try to "tuck under" when cornering hard, and one may unexpectedly find oneself *in extremis* right in the middle of a bend. The tendency toward this can be reduced, by recourse to funny-business with springs, etc., but total abandonment of the simple, high roll-center swing axle layout is best.

For their 2000, and now the TR-4A, Triumph uses a rear suspension that is, very roughly speaking, a "sort of" swing-axle (more accurately, swing-arm), but with a lowered roll center and reduced camber change. We do not have specific data on the TR-4A IRS, but it is presumably much the same as that of the 2000—which has a maximum of 7° negative camber on full bump; 5° positive on full rebound. With this geometry, the roll center is high enough to limit body lean in cornering, and there is the proper amount of camber change to hold the "outside" tire perpendicular to the road surface.

Of course, one of the big advantages (and doubtless the one for which it was chosen) of the Triumph independent rear suspension, is that each rear wheel is carried on a single member. These members are massive aluminum castings, pivoted on rubber bushings at their forward end. The pivot centerlines run diagonally across the chassis; if they were parallel with the rear axle centerline the car would have a trailing link rear suspension, with a roll center at ground level. The suspension members are, by the way, rather intricate, with recesses for the coil-type springs cast in, and lugs behind the hub section for mounting the dampers. Recesses are also cast-in at the hub end of the suspension members, and the outboard half-shaft joints fit into these. The axle shafts themselves are carried in separate hubs that bolt onto the suspension members, and camber adjustments are made by inserting shims under the hubs. More shims, under the suspension pivot clevises, gives an adjustment for toe-in. All of this suspension adjustability should make the racing element among Triumph fanciers very happy.

The IRS final drive assembly uses much the same center-section as the live-axle arrangement, except, of course, that where the axle-housing tubes should emerge from the gear casing there are stub shafts and the inboard U-joints. The gear casing is vibration-insulated from the rest of the car by its four widely spaced rubber mounts. One of the problems always associated with independent rear suspensions is that of drive-component noise being transmitted up into the passenger compartment. Triumph has taken appropriate measures to confine the noise to its source—and have been largely, if not entirely, successful.

With the drastic alteration in rear suspension, the IRS Triumph has had equally drastic alterations in its rear frame section. The double rails with X-member frame used under Triumph's live-axle car is simply not compatible with the independent rear suspension system used. So (to the extent that we could determine by slithering around under the car), the frame rails have been moved outward, and then jog in, just ahead of the rear wheels. The suspension pivots are on this turned-in leg. The rear legs of the X-member come back to join with the inner ends of the rails, and then extend on back, running roughly parallel to the chassis centerline, to assume the function of the now-shortened frame rails. A high, channel-section perch for the upper ends of the coil springs has been added to the frame immediately forward of the drive. The impression we get is that most of the previous frame has been utilized, but very cleverly rearranged to do its new job. It is especially interesting, and a compliment to all concerned, that even with all of the added hardware under the back of the car, no encroachments have been made into trunk or passenger space.

With or without the IRS, the TR-4A must be counted as a considerable improvement over its predecessors. It is, for example, a better handling car. The front suspension geometry has been changed to raise

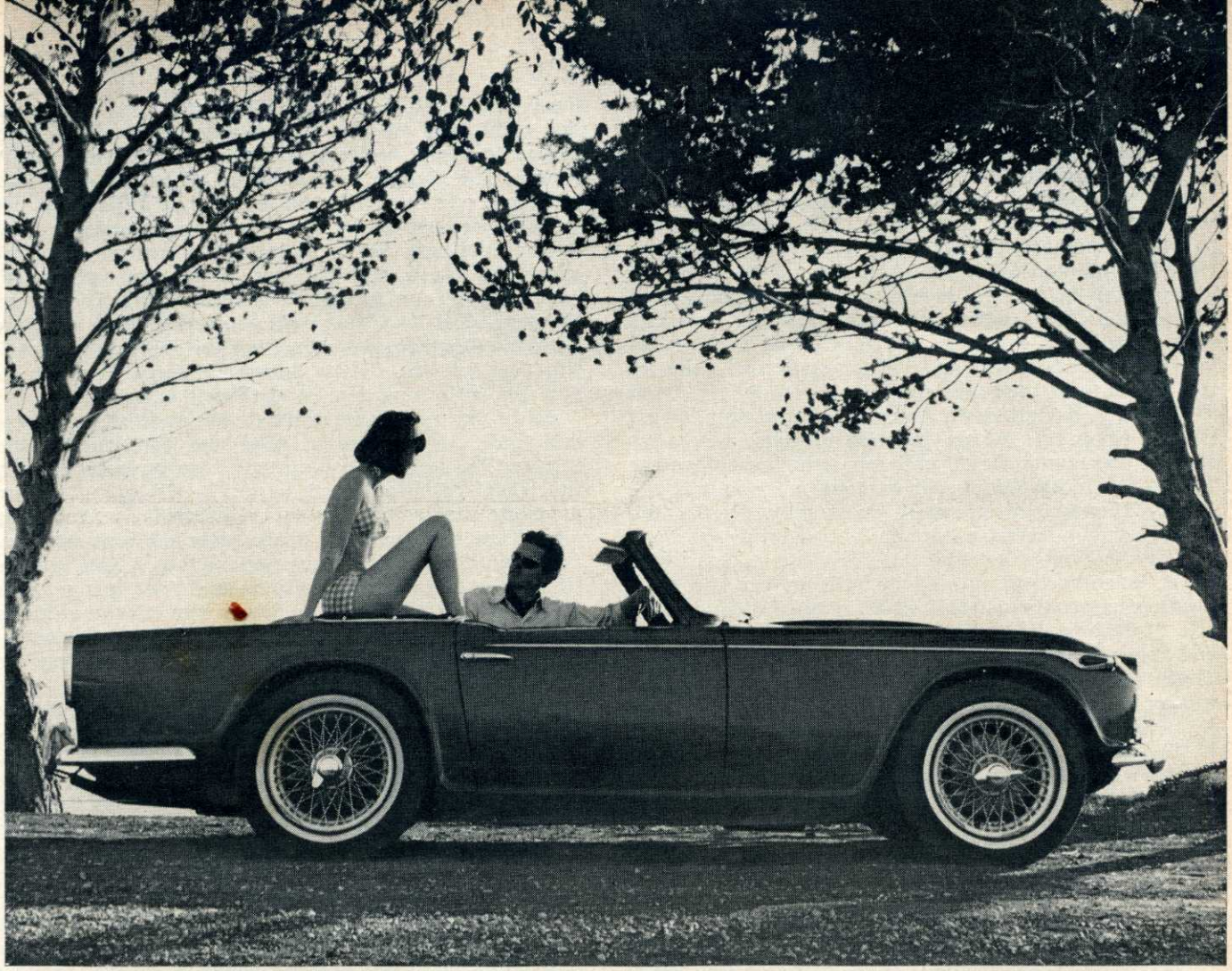

PHOTOGRAPHY: RICK McBRIDE

CONTINUED

the front roll-center, and the car is now delivered with low-profile, high cord-angle Goodyear "Grand Prix" tires, which run at a lower slip-angle than those used in the past and are, in fact, a semi-racing tire.

The in-group will be able to identify the TR-4A by several little items on its exterior. The Triumph badge has been replaced by their old globe design, replete with latitude and longitude grid, and on the trunk lid it says "TR-4A". There is also a bit of chrome giving the initials "IRS" when that is appropriate, but this seems a trifle vulgar to us. We recall with embarrassment the "Overdrive" and "Flush-O-Matic" signs of the recent past, and are moved to wonder why not "30W Oil", "4-Cylinder", or even "Diaphragm-Spring Clutch." Frankly, we are inclined to doubt that anyone but the owner would care very much whether the TR-4A has independent rear suspension or none at all. Other Triumph owners will know anyway: by the slightly knock-kneed aspect of the car from the rear; and by the simple fact that the IRS car does not give a great, lurching leap over every little nub in the road.

Other external clues that identify the TR-4A are the bits of chrome trim running down the fender crown and the light bezels on the sides of the front fenders. These may look a trifle peculiar to those accustomed to the clean flanks of the original TR-4, but they do put a signal flasher where it can be seen from the side of the car—a handy thing when one is trying to change lanes in heavy freeway traffic. Finally, there are new and more effective bumper over-riders, front and rear, and the front bumper has been raised.

You may also notice, if you are a very sharp Triumph type, that the TR-4A has a new top. No more will one be asked to erect a framework only slightly less complicated than a Coney Island roller coaster and then strap a cover into place. The new top yanks into place (virtually one-handed) in a flash with the top fabric all neatly attached. Pip on a few snaps, and then dog it down with the pair of over-center latches above the windshield. Gloriosky, Zero! Unhappily, the time may come when you will want to return the top to its well; that is when the trouble may start. You see, in providing a top frame that scissors up and down, Triumph has succeeded in making one that will also function with marvelous effectiveness. Fling the top carelessly down, and you may find that the frame has scissored so many holes in the fabric that it looks like a poncho for an octopus.

However, assuming that you are properly forewarned, and take care, this will not happen, and it must be said that the top fulfills its primary function beautifully. It looks neat, is weather-tight, and does not drum appreciably at any speed. Finally, not the least of its virtues is that it is simply full of window around the back. There are no blind spots.

Changes have been made inside, too. The most notable, and worthwhile of these is in the seats, which have the same framing as before but now have deeper padding. The new seats gain on comfort from being softer, but it is a change in contour that really makes the difference. Before, the bottom seat cushion (until it was broken in) gave one the feeling of sitting on a half-inflated basketball, with little support under the thighs. Now, there is a padded roll around the edges of the seat, and of course this gives an impression of sitting *in,* rather than *on,* the seat—a tremendous improvement. The material covering the seats is described as a "two-way stretch leathercloth," but one may order real leather.

There are other interior alterations. The handbrake lever, previously positioned a long arm's reach over on the right side of the transmission cover, has been moved to a spot between the seat, over the driveshaft tunnel. The change in position is all to the good, but now that one must lift the lever, it is difficult to get enough pressure to set the rear brakes securely, and it was necessary for us to leave the transmission engaged to insure that the car would not roll away, helter-skelter, on its own. For reasons that escape us, the gear-shift lever has been shortened. Now a nubby lever may look quite dashing, but the shortening operation has left the driver without enough leverage to pop fast shifts unless a lot of muscle is applied.

All of the remaining controls are located as before, and that is a mixture of good and bad—mostly the former. The steering-column bolts can be loosened, and the wheel-reach adjusted, as in the TR-4, but it now develops that some vertical adjustment is needed as well. That extra padding in the seats has done wonders for comfort in one's nether regions, but it also gives a slightly higher sitting position—and *that* brings one's thighs up too close to the lower rim of the steering wheel. Skinny types will not be unduly bothered by this, but many will find that their knuckles tend to limit travel when they wind the wheel around.

We like the instrument layout. The speedo and tach are large, round, readable instruments, and are positioned right in front of the wheel. The use of colored lights has been held to a bare minimum: a light flashes with the turn indicators, and another warns that the generator is not charging. This last is just a warning device, as an ammeter has also been provided. You also get oil pressure, fuel level and water temperature gauges. There is a dazzling array of knobs and switches, including a trio of "wands" extending out from the steering column for lights, turn-indicators and the overdrive, but very graphic coded markings prevent confusion. The only one of the small controls that is poorly placed is the pull-knob for the hood latch. This one is tucked away over at the far right, and well up under the dash; a good spot for it in the right-hand drive cars, but as the bulk of Triumph's sports cars are sold abroad, with left-hand drive, it is odd that they do not move it a trifle nearer to hand. Those who smoke would, no doubt, also like the car better if it had an ash tray capable of holding more than one ash. Everyone will like the new console panel extending down from dash to transmission tunnel; it is wider than before, and the edges have been padded so that it is possible to bang one's leg against it without getting a bruise. We would award high points, too, for the two-speed windshield wipers and windshield washers, comforting signs of civilization, both. And we would like to toss in a good word for such miscellany as padded sun visors and the generally excellent interior fit and finish.

In compliance with the various smog-abatement laws, Triumph cars are fitted with crankcase rebreathers. In the past, crankcase fumes have been fed into the carburetor mouths, which can cause gumming of those somewhat delicate instruments, but now the fumes are led right into the manifold *via* a one-way control valve. On the TR-4A (as on late series TR-4s) you also get paper-element air cleaners, and these will actually stop fine particles of dust—a function never served by the old-style gravel-strainer filters.

On the exhaust side of the engine, the TR-4A has a very fancy manifold. The end cylinders are paired; so are the center cylinders—and the pairs feed into separate exhaust pipes that stay separate right down

(Text continued on page 90; specifications overleaf)

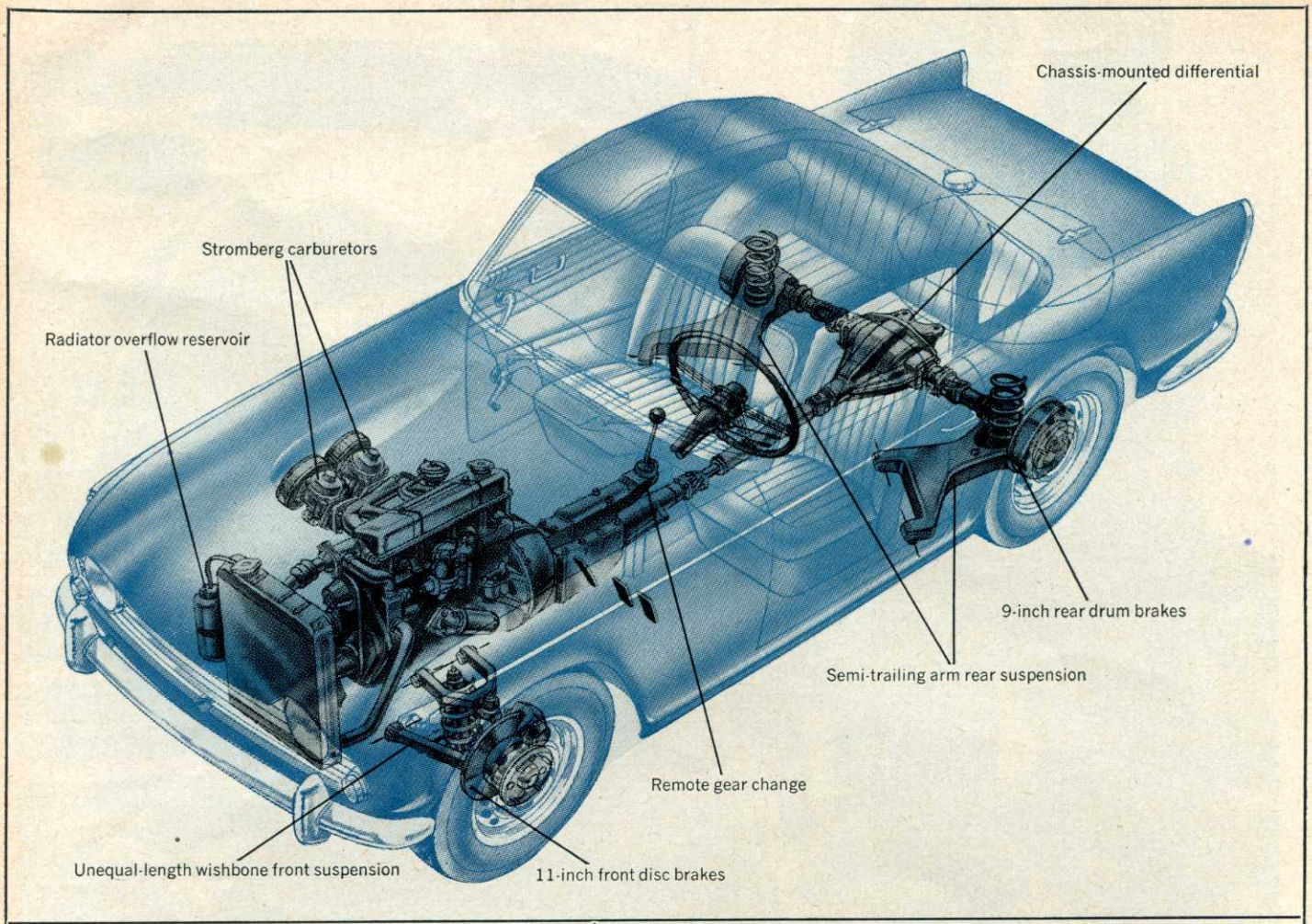
Chassis-mounted differential
Stromberg carburetors
Radiator overflow reservoir
9-inch rear drum brakes
Semi-trailing arm rear suspension
Remote gear change
Unequal-length wishbone front suspension
11-inch front disc brakes

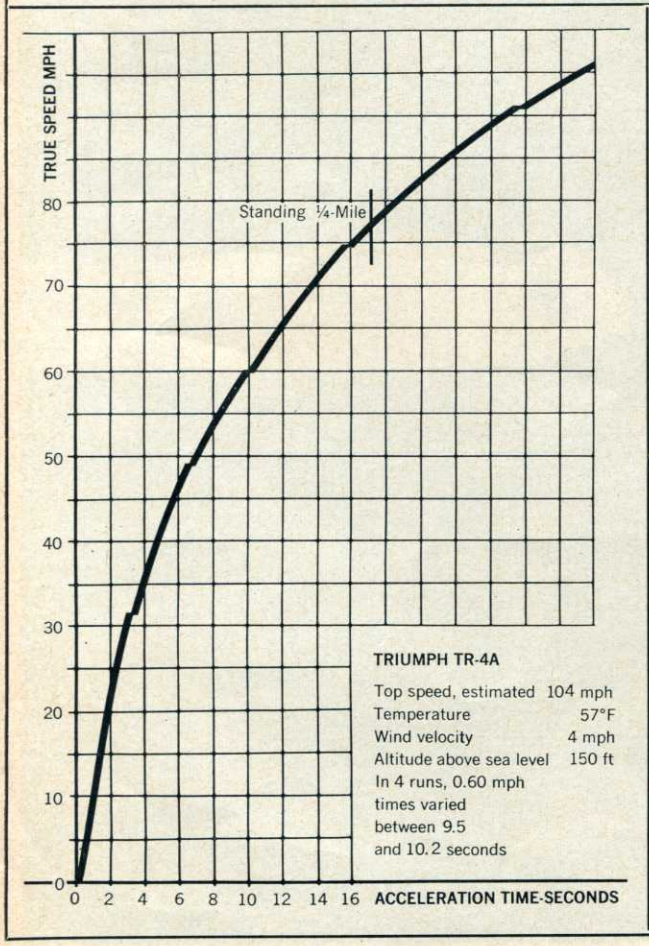
TRUE SPEED MPH
80
70
60
50
40
30
20
10
0
Standing ¼-Mile
0 2 4 6 8 10 12 14 16
ACCELERATION TIME-SECONDS
TRIUMPH TR-4A
Top speed, estimated 104 mph
Temperature 57°F
Wind velocity 4 mph
Altitude above sea level 150 ft
In 4 runs, 0.60 mph times varied between 9.5 and 10.2 seconds

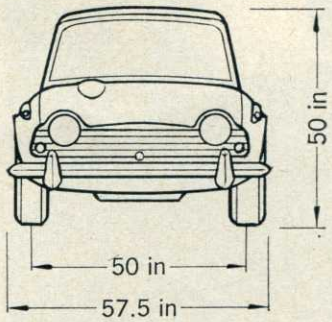
50 in
50 in
57.5 in

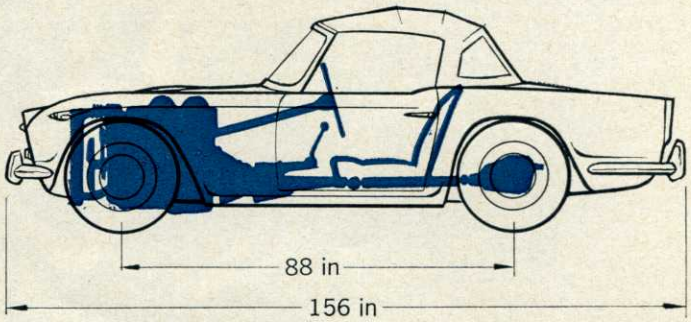
88 in
156 in

Road Research Report: TR-4A IRS

Importer: Standard-Triumph Motor Co. Inc.
575 Madison Ave.
New York, N.Y.

PRICES

Price as tested: $3049 East Coast POE

ENGINE

Water-cooled, four-in-line, cast iron block, 3 main bearings

Bore x stroke	3.39 x 3.62 in, 86 x 29 mm
Displacement	130.5 cu in, 2138 cc
Compression ratio	9.0 to one
Carburetion	2 Stromberg 175 CD
Valve gear	Pushrod overhead valves and rocker arms
Valve diameter	Intake 1.56 in, exhaust 1.30 in
Valve lift	.380 in
Valve timing	
Intake opens	15° BTC
Intake closes	55° ABC
Exhaust opens	55° BBC
Exhaust closes	15° ATC
Power (net)	105 bhp @ 4700 rpm
Torque	132.5 lbs-ft @ 3000 rpm
Specific power output	.805 bhp per cu in, 49.2 bhp per liter
Usable range of engine speeds	1000–5000 rpm
Electrical system	12 Volt, 51 amp-hr battery
Fuel recommended	Premium
Mileage	22–28 mpg
Range on 14-gallon tank	308–392 miles

DRIVE TRAIN

Clutch	9-inch single dry plate diaphragm spring
Transmission	4 speed, all synchromesh

Gear	Ratio	Over-all	mph/1000 rpm	Max mph
Rev	3.223	11.93	—6.1	—30.6
1st	3.139	11.61	6.3	31.5
2nd	2.01	7.43	9.85	49.2
3rd	1.325	4.90	14.9	74.5
4th	1.00	3.70	19.8	99.0
5th	0.82	3.034	24.1	120 (theoretical)

Final drive ratio ..... 3.70 to one

CHASSIS

X—member frame, separate all-steel body

Wheelbase	88.0 in
Track	F 50, R 49.2 in
Length	156 in
Width	57.5 in
Height	50.0 in
Ground clearance	6 in
Dry weight	0000 lbs
Curb Weight	2188 lbs
Test weight	2495 lbs
Weight distribution front/rear	51/49%
Pounds per bhp (test weight)	23.75
Suspension	F: Ind., unequal length wishbones and coil springs R: Ind., diagonal-pivot swing-arms and coil springs
Brakes	Girling discs front, 9-in drums rear, 225 sq in swept area
Steering	Rack and pinion
Turns, lock to lock	3.2
Turning circle	33 ft
Tires	5.95-15
Revs per mile	820

MAINTENANCE

Crankcase capacity	6 qts
Oil change interval	6000 miles
Grease fittings	15

ACCELERATION

Zero to	Seconds
30 mph	2.9
40 mph	4.7
50 mph	7.1
60 mph	9.8
70 mph	13.7
80 mph	18.8
90 mph	24.5
Standing ¼-mile	76 mph in 17.5

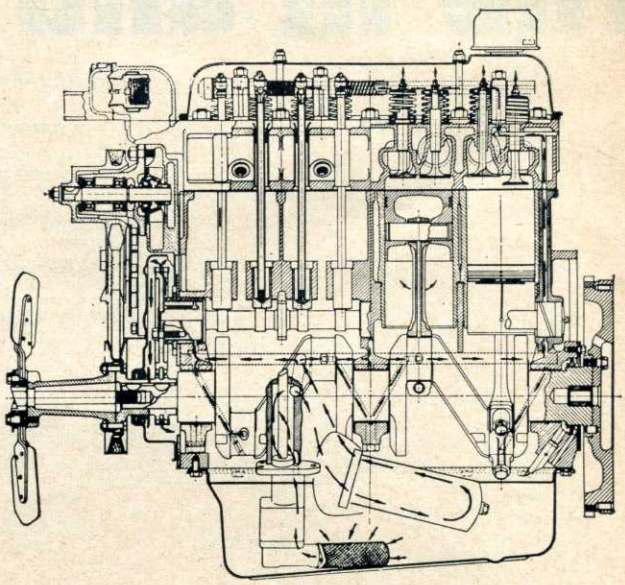

Above, a side view of the 105-hp Triumph engine, as used in the TR-4 and TR-4A. Below, an end view of the same engine, minus the Stromberg 175 CD carburetors (which replaced the original SUs). Arrows trace the path of the oil circulation.

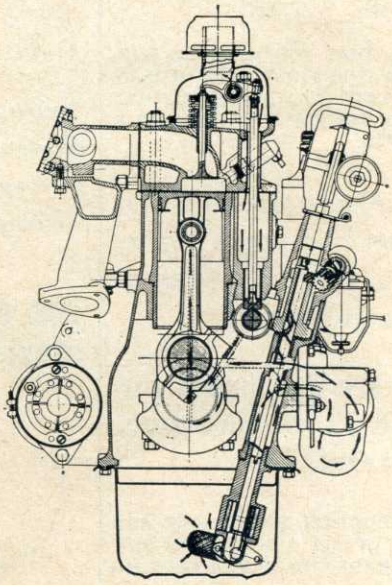

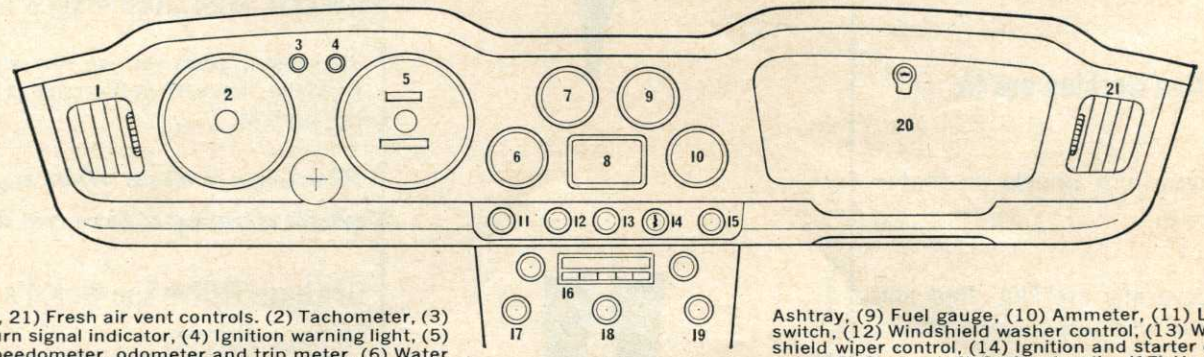

(1, 21) Fresh air vent controls. (2) Tachometer, (3) Turn signal indicator, (4) Ignition warning light, (5) Speedometer, odometer and trip meter, (6) Water temperature gauge, (7) Oil pressure gauge, (8) Ashtray, (9) Fuel gauge, (10) Ammeter, (11) Light switch, (12) Windshield washer control, (13) Windshield wiper control, (14) Ignition and starter control, (15) Choke, (16) Optional radio, (17) Heater, (18) Blower, (19) Defroster, (20) Lockable glove box.